SHARP

MX-C300W / MX-C250F

Digital Full Colour Multifunctional System

DESKTOP MFP WITH COMPACT AND SMART DESIGN

You strive for efficiency. You hate waste /This is Why you'll love these desktop MFPs.

Powerful, compact and affordable /This is Why these MFPs are right for you.

The more successful you are, the more there is to do. And, somehow, there never seems to be enough time, money, people or space. Which is why, if you're looking for a new multifunction printer (MFP) you should take a close look at the Sharp MX-C300W or MX-C250F.

The two models are capable of printing and copying at speeds of either 30 or 25 pages per minute (ppm). And that's regardless of whether you're working with black & white or full colour documents. That's plenty of performance for any small workgroup and more than enough for personal use.

But print speeds are just one part of the productivity equation. That's why we've designed these MFPs to print and copy on both sides of the page automatically, saving you time and effort while reducing paper consumption.

A 50-sheet document feeder (35-sheet if you choose the MX-C250F) lets you can scan as many as 9 full colour pages every minute at the full 600 x 600 dpi resolution. Just load your documents and let the MFP do its job while you get on with something else.

Fits where you want, does what you need

These MFPs are a great choice if you're short on space. Not only do they have a surprisingly compact design but you can increase the paper supply right the way up to 800 sheets without using more desk space.

Both models are equipped with a handy USB port for walk-up printing and scanning with a memory stick. And if you choose the MX-C300W, you can connect it to a wireless network and print wirelessly from your smartphone or tablet.

FRONT ACCESS USB PORT

CHOICE OF DOCUMENT FEEDERS

Resources are precious /This is Why we help you make the most of them.

The MX-C300W and MX-C250F are small in size and smart in design. Both come with an easy-to-read LCD control panel with programmable function keys, and their two-component development system delivers quality that's sure to impress.

Other useful features include full fax functionality (with PC-Fax and inbound routing for emailing faxes to their correct destination) and ID Card Copy.

ID Card Copy makes it easy to copy both sides of a card (such as an ID card or credit card, for example) on to a single page. It's convenient, and it saves you money.

OPTIONAL 500-SHEET PAPER DRAWER

Built-in security

If you're in a shared office you might want to control who can use your MFP. And you certainly don't want sensitive documents being left out in the open.

With User Authentication, we help you restrict access to authorised users who can 'unlock' the device by identifying themselves with a personal 5-digit security code.

For extra peace of mind, Sharp uses IPsec technology to encrypt data and to make sure that your system isn't communicating with any unidentified users.

Energy Efficiency

No one likes to waste energy. And that's another reason to put the Energy Star-certified MX-C300W and the MX-C250F at the top of your shopping list. For a start, their low power consumption and rapid warm-up times bring real savings.

They also have a special Toner Save Mode which reduces the amount of toner used for images and graphics without compromising the quality of the text. They even switch themselves off if you haven't used them for a set period of time.

5 LINE LCD OPERATION PANEL WITH PROGRAMMABLE FUNCTION KEYS

Specifications

General

Engine speed (ppm/cpm) (Max)	
Colour / B/W	A4
MX-C300W	30
MX-C250F	25
Paper size (Min – Max)	A6R – A4R
Paper weight (g/m²)	
Drawer	60 – 105
Bypass	55 – 220
Optional Drawer	60 – 105
Paper capacity (Std – Max)	
Sheets	300 – 800
Drawers	1 – 2
Warm-up time*1 (seconds)	29
Memory (MB)	512
Power requirements	220-240V, 50/60 Hz
Power consumption (kW) (Max)	1.84 (200 - 240 V)
Dimensions (mm) (W x D x H)	
MX-C300W	429 x 509 x 421
MX-C250F	429 x 509 x 398
Weight (kg)	
MX-C300W	29
MX-C250F	28

Copier

Original paper size (Max)	A4
First copy time*2 (seconds)	
Colour	18
B/W	10
Continuous copies (Max)	999
Resolution (dpi)	
Scan	600 x 600, 600 x 400 (default)
Print	600 x 600
Gradation levels	256
Zoom range (%)	25 – 400 (25 – 200 using RSPF/SPF) in 1% increments
Preset copy ratios	8 (4R/4E)

Network Printer

Resolution (dpi)		600 x 600
Interface		USB 2.0 10Base-T/100Base-TX
Supported OS		Windows® XP, Windows Server® 2003/2008/2008R2/2012, Windows Vista®, Windows® 7, Windows® 8 Mac OS X 10.4, 10.5, 10.6, 10.7, 10.8
Network protocols		TCP/IP (IPv4, IPv6), IPP, Bonjour
Printing protocols		LPR, Raw TCP (port 9100), FTP, IPP
PDL emulation		PCL6, PS3
Available fonts	PCL	80
	PS3	136
Printer utilities		Sharpdesk Mobile

Network Scanner

Scan method	Push scan (via operation panel), Pull scan (TWAIN-compliant application)
Resolution (dpi)	
Push scan	100, 150, 200, 300, 400, 600
Pull scan	75, 100, 150, 200, 300, 400, 600 50 - 9,600 via user setting
File formats	TIFF, PDF, JPEG (colour only)
Scan destinations	Scan to e-mail, FTP server, network folder (SMB), USB memory, desktop
Scanner utilities	Network Scanner Tool, Sharpdesk, TWAIN, Sharpdesk Mobile

Fax

Compression method		MH/MR/MMR/JBIG
Communication protocol		Super G3
Transmission time*3 (seconds)		Less than 3
Modem speed (bps)		33,600 – 2,400 with automatic fallback
Transmission resolution (dpi)		
	Std	203.2 x 97.8
	Fine	203.2 x 195.6
	Super Fine	203.2 x 391
Recording width		A4 – A6
Memory (MB)		8

Wireless LAN (MX-C300W)

Compliant regulation	IEEE802.11n/g/b
Access mode	Infrastructure mode, Software AP mode
Security	WEP, WPA Personal, WPA2 Personal

External Dimensions

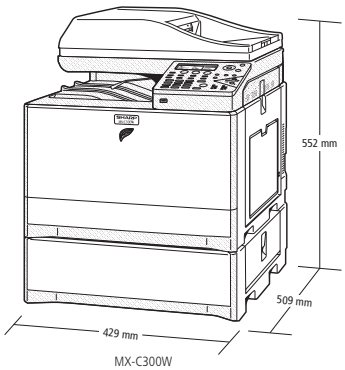

MX-C300W

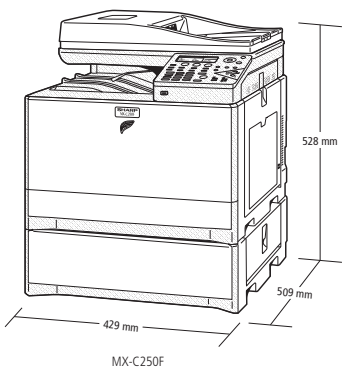

MX-C250F

Notes

*1 At rated voltage. May vary depending on machine conditions and operating environment. *2 Best achieved time based on A4 copy, long-edge feeding from 1st paper drawer, using glass, when machine is ready, without Auto Colour Mode and Auto Colour Selection. May vary depending on machine conditions and operating environment. *3 Based on Sharp's standard chart with approx. 700 characters (A4 portrait) at standard resolution in Super G3 mode, 33,600bps, JBIG compression.

Design and specifications are subject to change without prior notice. All information was correct at time of print. The ENERGY STAR logo is a certification mark and may only be used to certify specific products that have been determined to meet the ENERGY STAR programme requirements. ENERGY STAR is a US registered mark. The ENERGY STAR guidelines apply to products only in the US, Europe, Australia, New Zealand and Japan. Windows, Windows XP, Windows Server and Windows Vista are registered trademarks of Microsoft Corporation. All other company names, product names and logotypes are trademarks or registered trademarks of their respective owners. ©Sharp Corporation December 2014 Ref: MX-C300W/MX-C250F. All trademarks acknowledged. E&OE. UK. December 2014.

This is Why

www.sharpbusiness.com

SHARP

DEALER STAMP

SHARP BUSINESS SYSTEMS UK PLC
NORTHERN HOUSE, MOOR KNOLL LANE,
EAST ARDSLEY, WAKEFIELD WF3 2EE
E: enquiries@sharpbusiness.com
W: sharpbusiness.com
T: 01924 823455

ENERGY STAR

R6 READY